

Engineering selection · Supply experience

20–40 bar high-pressure compressors: how to select equipment for production

Flow, air-ends, cooling and air treatment. I explain compact packages, boosters and Twin systems using examples from our projects.

Select your parameters

Alexey Viktorovich Komlev
Deputy Technical Director, AversTechno

I select high-pressure compressors around air demand, pressure at the point of use and the production schedule. This article compares designs, describes our projects and provides documents for requesting a quotation and accepting the equipment.

How to select a 20–40 bar compressor

Start with the pressure and air flow required by the equipment. Compare compressor flow at that pressure, the compression arrangement and the cooling system. Check the pressure ratings of the receiver, dryer and filters, the air quality and the total electrical power required by the package.

Start with the production process

How much pressure and air flow are required?



Compressors rated at 20, 30 and 40 bar are used for PET bottle blowing, certain metalworking processes and testing equipment, for example. The production line determines the pressure requirement. Different products and operating modes on the same machine may require different conditions.

Pressure at the machine

Use the equipment manufacturer's requirement and allow for losses through the dryer, filters and piping. If the line requires 20 bar, a compressor with a maximum pressure of 20 bar may not maintain that pressure after the air-treatment system.

Flow at the operating point

Compare m³/min at the selected pressure. Check whether the stated flow is free air delivery, or FAD, and identify its reference conditions. Compressed volume flowing through a pipe cannot be compared directly with FAD.

Operating schedule

Continuous operation requires suitable cooling, maintenance arrangements and backup capacity. For variable demand, assess the VSD turndown range and the air receiver's ability to cover short peaks.

Example. A machine requires 1.8 m³/min of free air at 20 bar. A flow of 2 m³/min provides a margin of 0.2 m³/min, approximately 11% of demand. Other consumers, leaks and pressure losses must also be considered. Compare flow figures stated specifically at 20 bar.

Avoid raising the whole factory air network to 30–40 bar for a single consumer. It is usually more economical to retain the network's normal operating pressure and provide high pressure separately. A booster suits some applications; others need a standalone compressor. We explain how to combine the demand of several consumers in our article on calculating compressor capacity.

Match the design to the application

Which compressor design suits 20–40 bar?

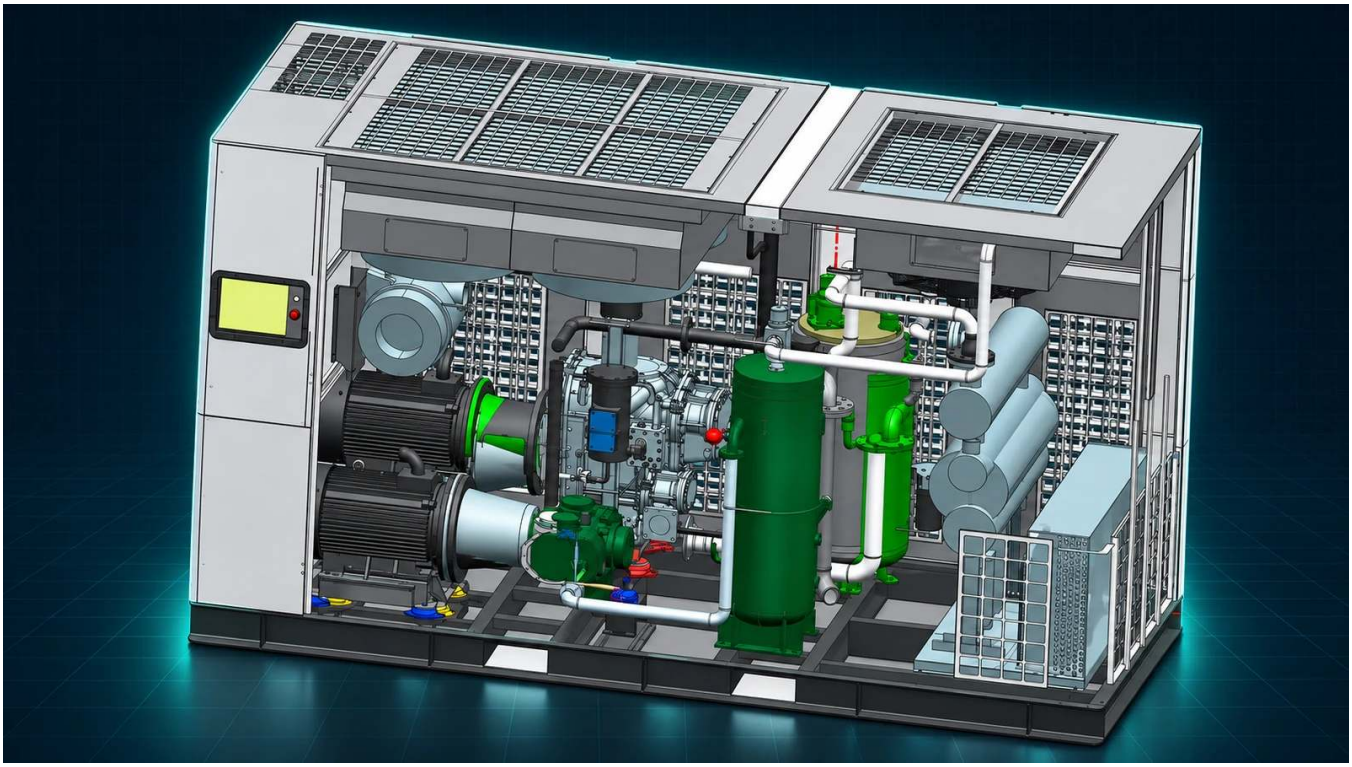

The table covers three typical applications from our work. The required-flow ranges describe the customer's task; the capacity of an individual machine must be confirmed at the selected pressure.

Selecting the compression arrangement, power and air treatment for the production conditions

Application and duty	Pressure and air demand	Our proposed arrangement	Motor rating	Total package power input	Cooling and air treatment	Selection basis
Laser cutting with low air demand	20 bar; approximately 2 m³/min or less. For 2–3 m³/min, select a drive sized for the required flow.	Single-stage Hanbell AH210; a 4-in-1 package is available.	Example: GMP GM22-20-600D VSD, rated at 22 kW with SF 1.3. The air-end calculation requires approximately 26 kW at the shaft for 2 m³/min.	Establish this from the package data sheet or measurement of the complete machine, including the drive, fan and dryer. The 22 kW motor rating is a separate figure.	Receiver, liquid-water separator, dryer and filtration with an activated-carbon stage to suit the laser's requirements.	Hanbell calculations and the GMP configuration
Compact package for a 25–30 bar line	25–30 bar; a typical requirement is 2–4 m³/min. Verify the required operating point separately.	BAOSI BLW series, with a scroll or screw second stage depending on the configuration.	30 kW in the GM30-25VSD and GM30-30VSD configurations described here.	Request the figure for the specific configuration and duty. Air-end data do not include every electrical consumer in the package.	Interstage cooling, condensate separation, drying and filtration selected for the line.	Configurations and actual photographs of our machines
Critical production line, such as PET blowing; continuous 24/7 duty	20–40 bar; FAD matched to the production line's consumption and operating schedule.	Twin: two separate screw air-ends, two motors and independent variable-speed control.	Size both motors for their respective stages. The GM132-40GE VSD TW supply description specifies 132 kW; obtain each drive's rating from the machine documentation.	Include both drives, the dryer, fans and the pumps used by the selected cooling system. Confirm the value from the package data sheet or measurement.	For these applications we recommend water cooling and full interstage air treatment.	Twin design and our Cherkessk installation

A separate booster is also an option when the plant already has enough treated air at the required inlet pressure. Compare the original compressor, the booster and all auxiliary equipment as a complete system.

In Twin, two VFDs control the two compression stages. In another package, the second VFD may control the cooling fan, as in our Multiplast project.

Small 20 bar packages

Hanbell AH210: check the exact air-end model



HANBELL
HANBELL PRECISE MACHINERY CO.,LTD.

Single-stage screw compression can achieve 20 bar. For the GMP GM22-20-600D VSD we use the eight-bearing Hanbell AH210 with a direct variable-speed drive. GMP specifies 2 m³/min at 20 bar, a 22 kW nominal motor rating, a 600-litre receiver and a dryer.

Hanbell's catalogue identifies the AH series as **Laser Cutting — for laser-cutting applications**. The family covers 7.5–37 kW, 0.5–4 m³/min and 13–20 bar. Hanbell catalogue, page 15 (PDF).

How a 22 kW motor supports a flow of 2 m³/min

The motor in this configuration has a **service factor of SF = 1.3**. For this drive, the stated permissible output relative to its nominal rating is **22 × 1.3 = 28.6 kW**. Selection therefore considers both the 22 kW nameplate rating and the motor's permitted operating duty.

Hanbell's AH210 calculation dated 19 November 2026 gives 1.83 m³/min at 24.4 kW shaft power and 2.11 m³/min at 27.1 kW, both at 20 bar. Linear interpolation between these points gives **approximately 26.0 kW at the air-end shaft for 2 m³/min**. This falls within the stated motor's range with SF 1.3. At 25 kW, the same calculation gives approximately 1.89 m³/min.

Why the AH130 frame size needs checking

In our work, we encounter budget 22 kW, 20 bar compressor packages that use the smaller and less expensive Hanbell AH130 to reduce their price. It is also an eight-bearing Hanbell air-end, but its flow capacity is lower than AH210's.

Offers for such packages often quote 1.7–1.8 m³/min. If those figures are presented as the flow at 22 kW shaft power, we consider that comparison misleading: the factory calculation gives approximately 1.4 m³/min at that operating point. We therefore provide the characteristics of both air-ends so readers can check the flow, speed and required power for themselves.

The Hanbell AH130 calculation at 20 bar and 3,600 rpm gives **1.75 m³/min at 26.3 kW shaft power**. The same factory calculation specifies the following at 2,960 rpm: **1.41 m³/min and 22.1 kW shaft power**. Interpolating adjacent points for 22 kW gives approximately 1.40 m³/min; at 3,000 rpm, it gives approximately 1.43 m³/min.

You can check the characteristics in the Hanbell air-end selection tool: select the air-end model, discharge pressure and rotational speed to obtain the required operating point. Sign-in or registration may be required.

AH210 reaches the required 2 m³/min at 20 bar at approximately **2,180 rpm and 26 kW shaft power**. This power is permitted for our motor with a nominal rating of 22 kW and SF 1.3. We therefore select AH210 for this task: it delivers the required flow at a lower speed.

Download the factory Hanbell AH130 calculation, tables and performance curves — PDF

Calculated air-end operating points at 20 bar

Air-end	Flow	Male rotor speed	Air-end shaft power	Basis
Hanbell AH130	≈1.40 m³/min	≈2,940 rpm	22.0 kW	Interpolation of the AH130 table with shaft power limited to 22 kW
Hanbell AH210	2.00 m³/min	≈2,180 rpm	≈26.0 kW	Interpolation of the AH210 table; our configuration uses a 22 kW motor with SF 1.3

Compare the air-ends at the same shaft power: 26.3 kW. At 20 bar, the AH130 calculation gives 1.75 m³/min. Interpolating the AH210 factory table at the same power gives approximately 2.03 m³/min, about 16% more. Both calculations use the same inlet conditions: 0.1013 MPa absolute pressure, 20 °C and 80% relative humidity.

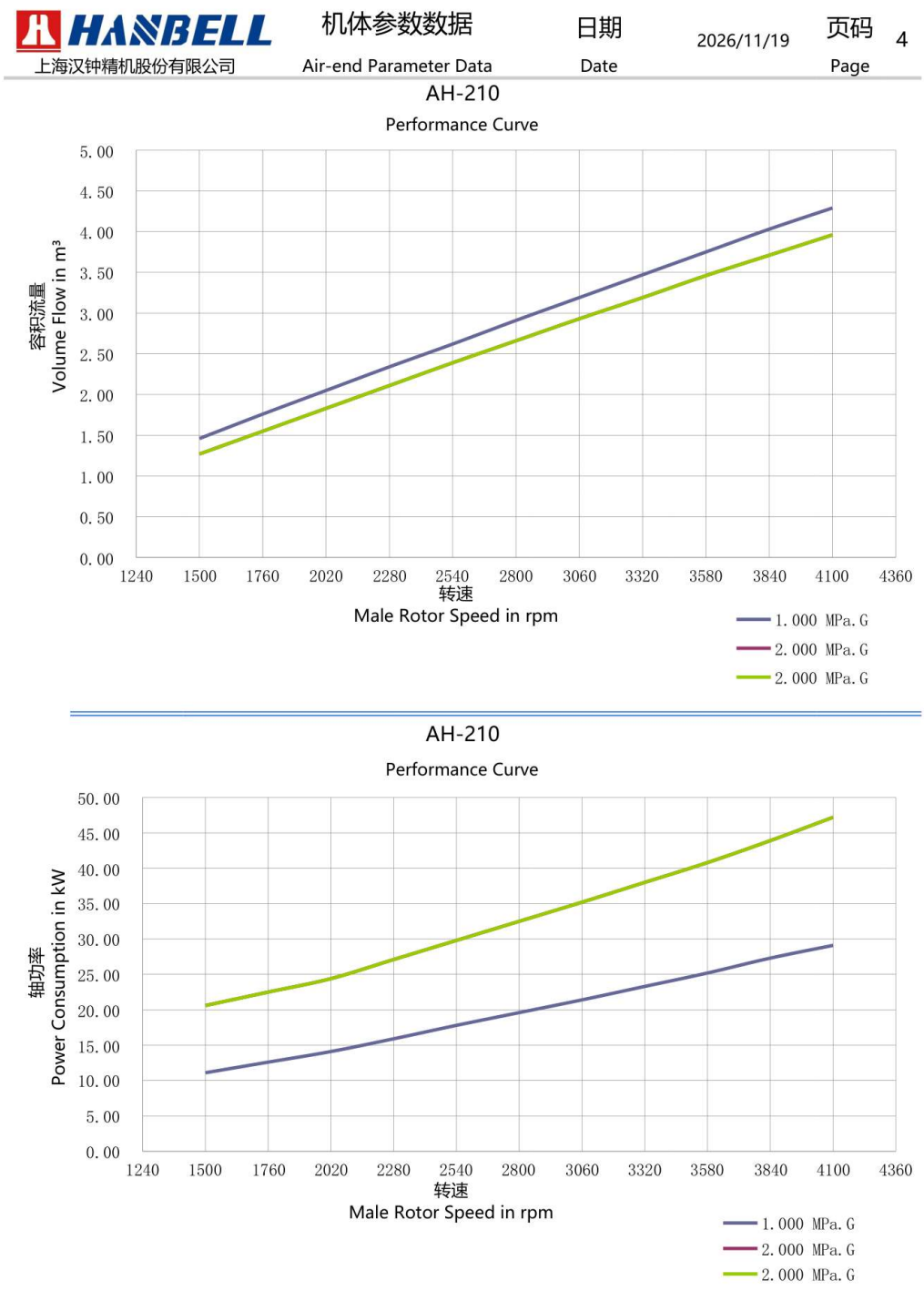

Original Hanbell graphs, page 4: flow and shaft power versus rotor speed. Select the image to open the PDF page at a larger size.

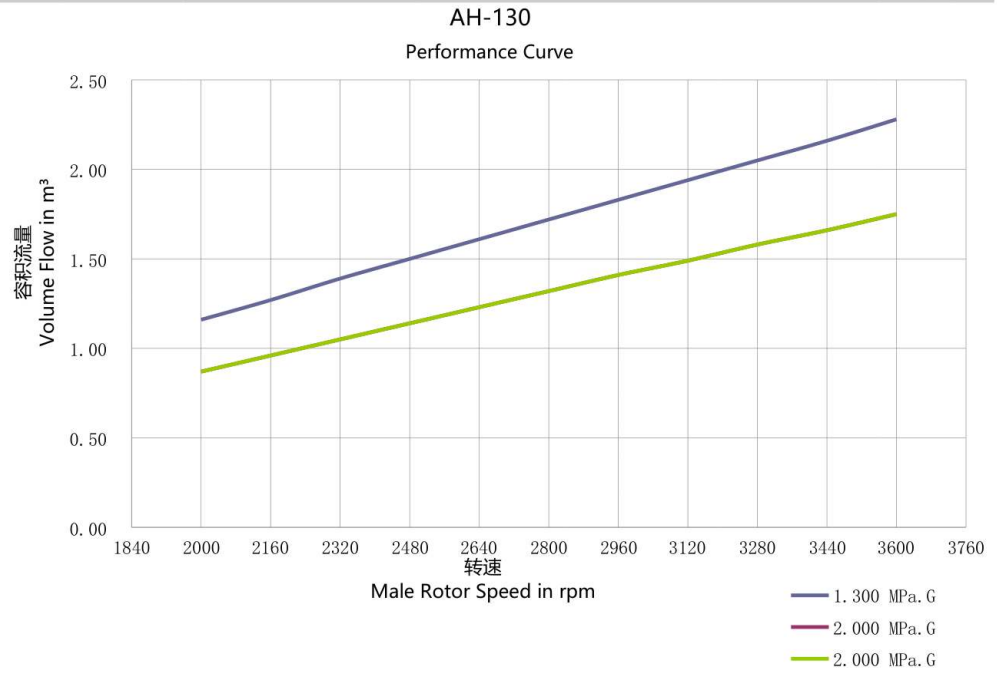

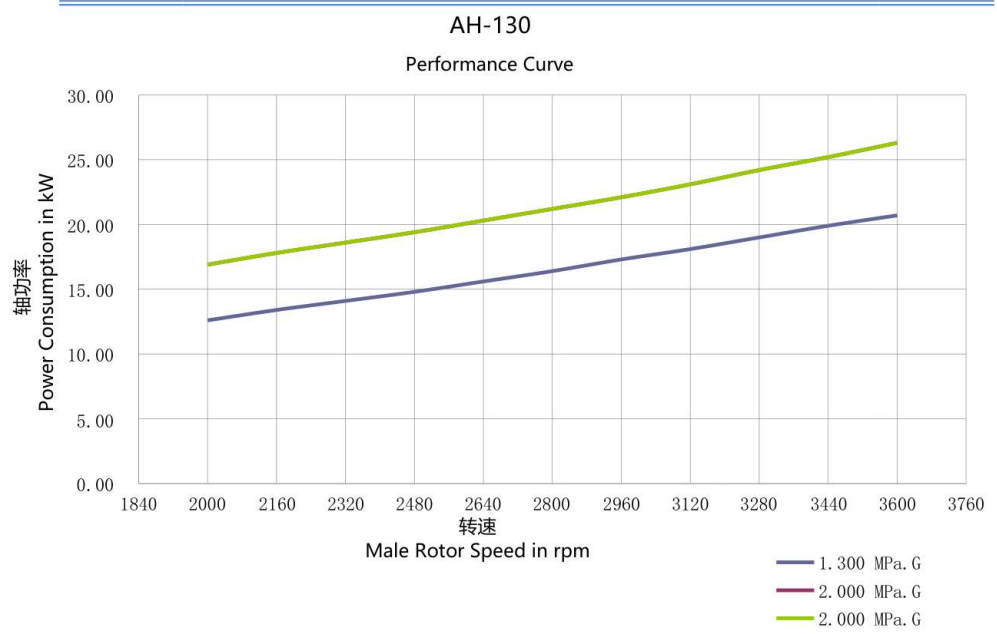

Original AH130 graphs, page 4: flow and shaft power versus rotor speed. For 20 bar, use the 2.000 MPa gauge-pressure curve.

Download the factory Hanbell AH210 calculation, tables and performance curves — PDF

Separate flow-versus-power graphs are on page 5 of the AH210 and AH130.

The AH210 calculation expresses flow at the inlet conditions: 0.1013 MPa absolute pressure, 20 °C and 80% relative humidity. Do not mix this value with a normalised flow in Nm³/min taken from a different line.

GMP GM22-20-600D VSD specifications in the KWT Market catalogue

Our experience · Perm

75 kW, 20 bar GMP compressor for Multiplast LLC



Our company supplied a GMP GM75-20GE VSD to Multiplast LLC, a manufacturer of PET containers and packaging materials. The previous blowing-air system used a standard-pressure screw compressor, a reciprocating booster and auxiliary equipment.

The booster was the most maintenance-intensive part of the previous system. When selecting a replacement, we wanted to reduce the number of separate compressor units and provide the required pressure for sustained operation.

75 kW motor rating
20 bar operating pressure

up to 8.2 m³/minstated flow
The supplied configuration uses a two-stage GE (Niemann) screw air-end with 15 bearings. Two INOVANCE MD500+ VFDs control the main motor and the fan motor. This machine has one compression drive and separately controlled cooling, a different arrangement from Twin.

The package combines the initial compression and the final compression to 20 bar. The dryer, receiver and filtration must still be selected for the production line: a screw air-end does not remove the need for air treatment.

Our GMP GM75-20GE VSD supply to Multiplast in Perm

GMP GM75-20GE VSD product page

Compact 30 kW packages · 25 and 30 bar

BAOSI BLW: 2 compression stages and a common drive shaft



The 30 kW, 25 bar GMP GM30-25VSD described here uses a BAOSI BLW-70B air-end: a screw first stage and a scroll second stage. The compression units and motor form a single assembly with a common drive.

This screw-scroll arrangement is also used in certain Crossair and ET compressors, as well as GMP models.

How the GMP GM30-30VSD differs

According to the configuration of our supplied machine, the 30 kW, 30 bar GMP GM30-30VSD uses a **BAOSI BLW114-30 with two screw-compression stages**. The GM30-25VSD with a BLW-70B has a scroll second stage and is a different configuration.

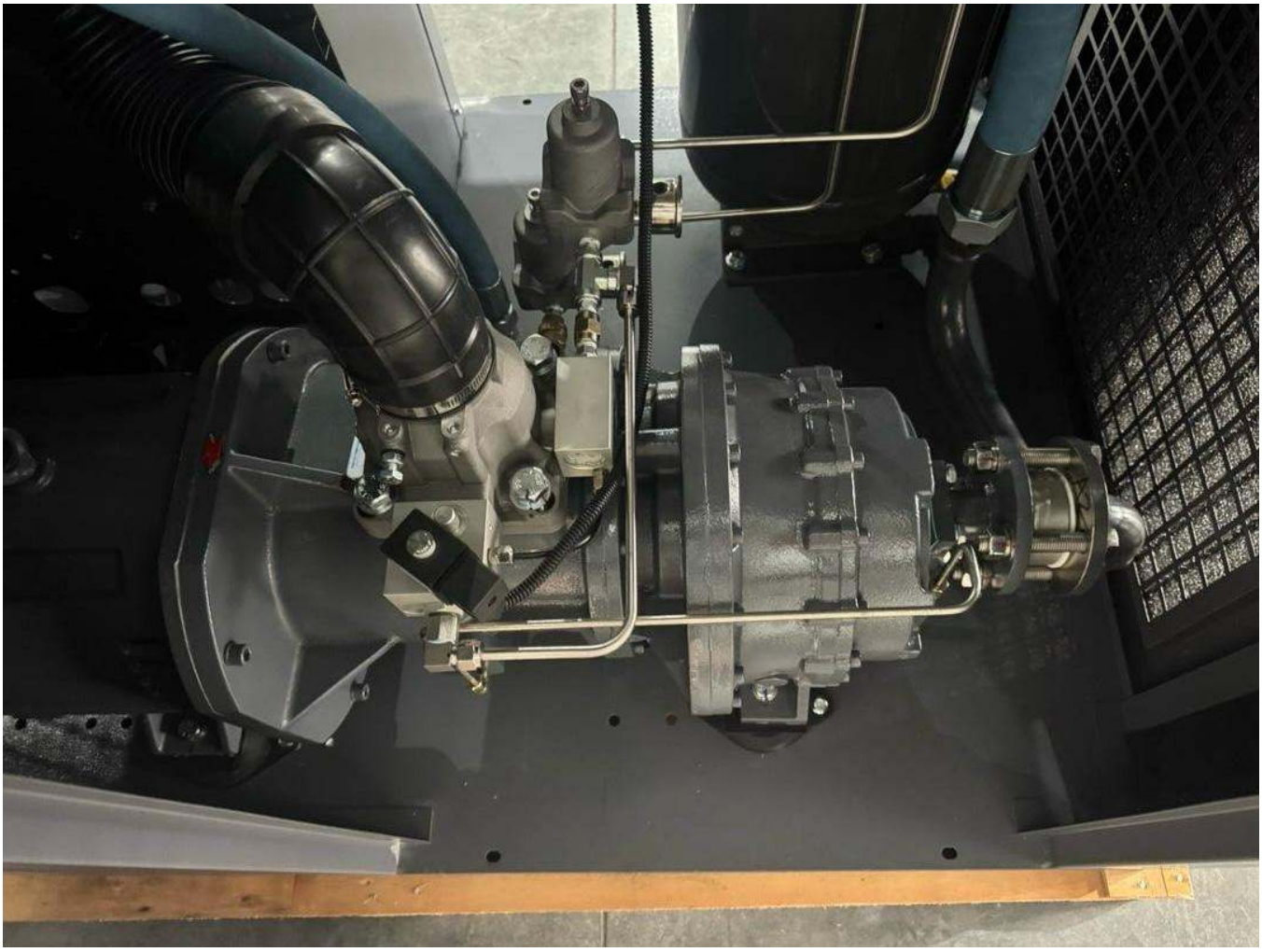

GMP GM30-25VSD — 30 kW, 25 bar. BAOSI BLW-70B: screw first stage and scroll second stage. Photograph from our work.

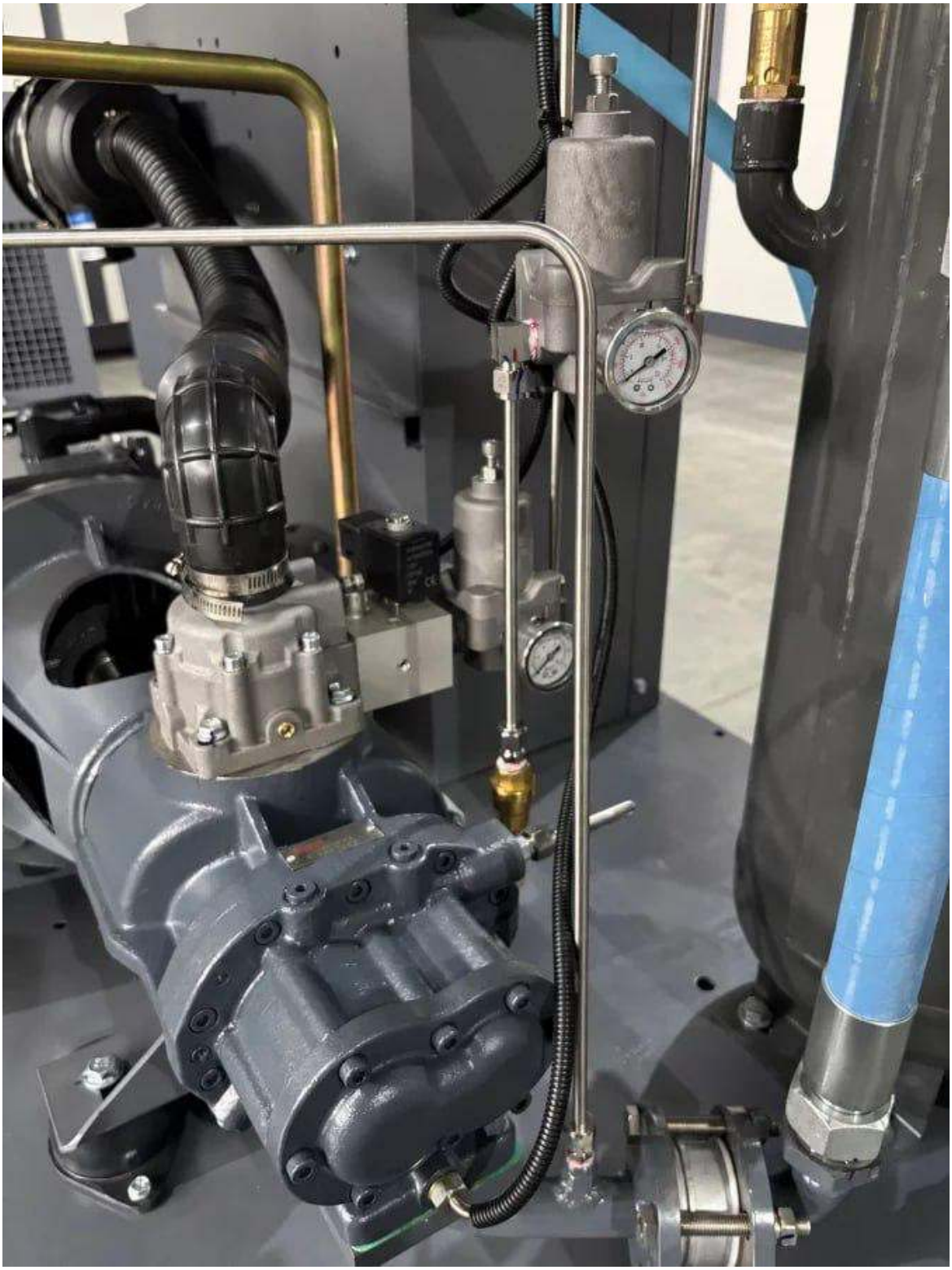

GMP GM30-30VSD — 30 kW, 30 bar. BAOSI BLW114-30: both stages in the configuration shown are screw stages. Photograph from our work.

Two arrangements in the 30 kW GMP compressors described here

Compressor	Pressure	First stage	Second stage
GMP GM30-25VSD · BAOSI BLW-70B	25 bar	Screw	Scroll
GMP GM30-30VSD · BAOSI BLW114-30	30 bar	Screw	Screw



Internal layout of a compact GMP unit, shown in a photograph from the GM30-30VSD gallery.

The common shaft in the screw-scroll arrangement

In patent CN111963437B, the drive shaft connects to the male rotor of the screw stage, passes through the motor as its shaft and drives the orbiting scroll of the second stage. One drive therefore connects the motor and both compression stages. The screw pair still has a second rotor on its own axis, while the moving scroll follows an orbital path.

The motor, screw unit and scroll unit are connected by flanges. The first stage compresses atmospheric air; after cooling, the air enters the second stage for further compression. The patented design provides oil injection into the screw stage, gas cooling after that stage, and oil cooling and lubrication of the scroll stage.

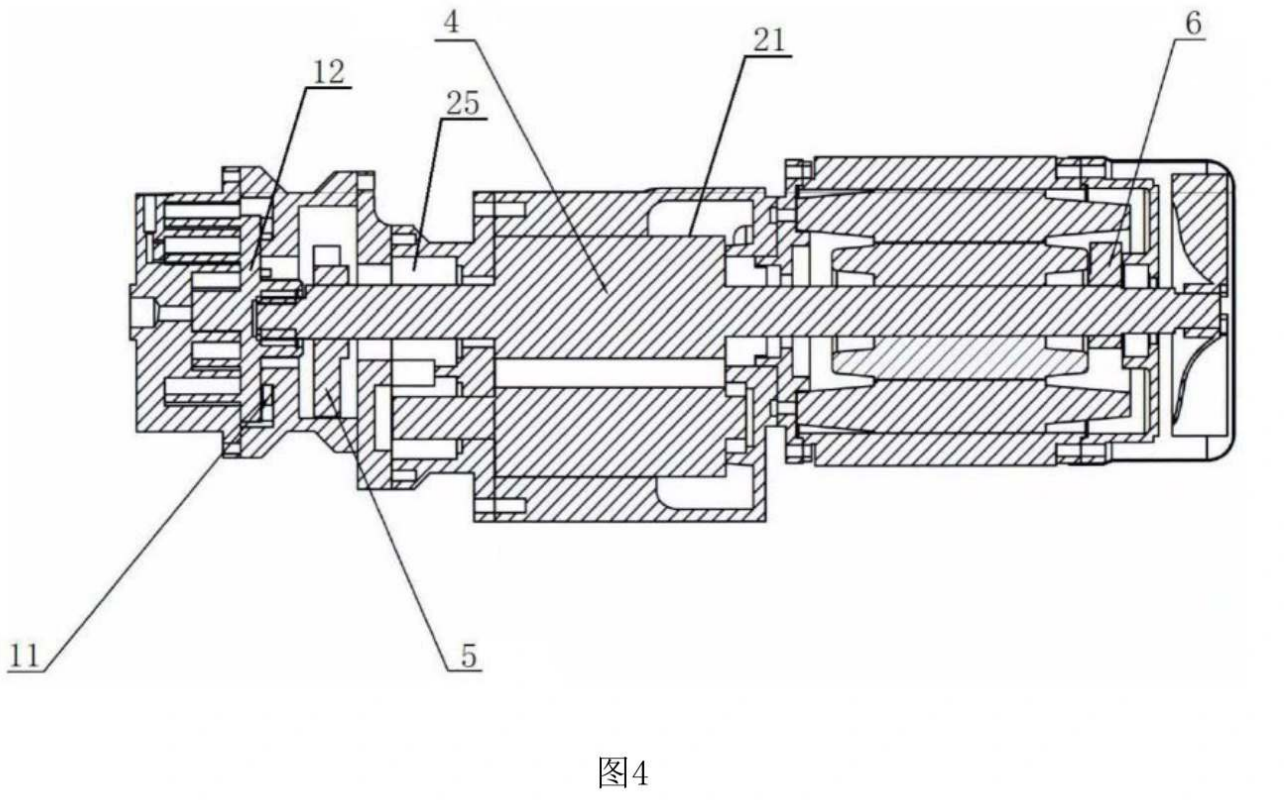

Section from the BAOSI patent: 4 — common drive shaft; 21 — male screw rotor; 12 — orbiting scroll. Select the image to view it at a larger size.

The configurations above describe our machines. The patent below specifically covers the screw-scroll design and shows the common drive of the motor and the two stages in that arrangement.

BAOSI patent CN111963437B

Chinese patent by Ningbo Baosi Energy Equipment Co., Ltd. for an integrated two-stage screw-scroll compressor. Claim 1 on the second PDF page describes the common drive; Figure 4 on the seventh page shows the section.

Download the original Chinese patent — PDF, 515 KB

Open the patent and translation in Google Patents

BLW has a common drive; Twin has a separate drive for each stage.

How I assess the design · 15 years of company experience

GMP Twin: why separate drives and an interstage dryer matter



Our 15 years of working with different high-pressure arrangements have shown how important the inlet conditions of the second stage are. For critical 24/7 applications, including PET blowing, we recommend Twin packages with two separate screw air-ends and motors, interstage air treatment and water cooling in the selected configuration.

Within one enclosure, each drive has its own INOVANCE MD500+ VFD, while a common controller coordinates the stages.

What happens when the second stage has insufficient cooling?

Air heats up during compression. In conventional compact two-stage packages we have worked with, the intercooler often has a small heat-transfer area. Under sustained high load, the air leaving the first stage does not cool sufficiently before entering the second. Further compression raises its temperature again, increasing the load on the oil, bearings and assembly as a whole.

Oil stability and compliance with the manufacturer's approvals are particularly important at high temperatures. In our experience, insufficient intercooling significantly shortened component service life compared with conventional single-stage machines.

On diesel compressor packages used for pipeline testing, we encountered overheated bearings, air-end repairs and downtime.

Two motors allow the stages to be coordinated

With a common drive, stage control is mechanically linked. Twin's separate drives allow the flows of the two air-ends and the inlet conditions of the final compression stage to be coordinated as demand changes.

The first stage compresses atmospheric air to an intermediate pressure; the second raises it to the required final pressure. Both stages are needed to produce high pressure. The two drives do not provide backup for one another.

Actual photographs of the GMP Twin interior

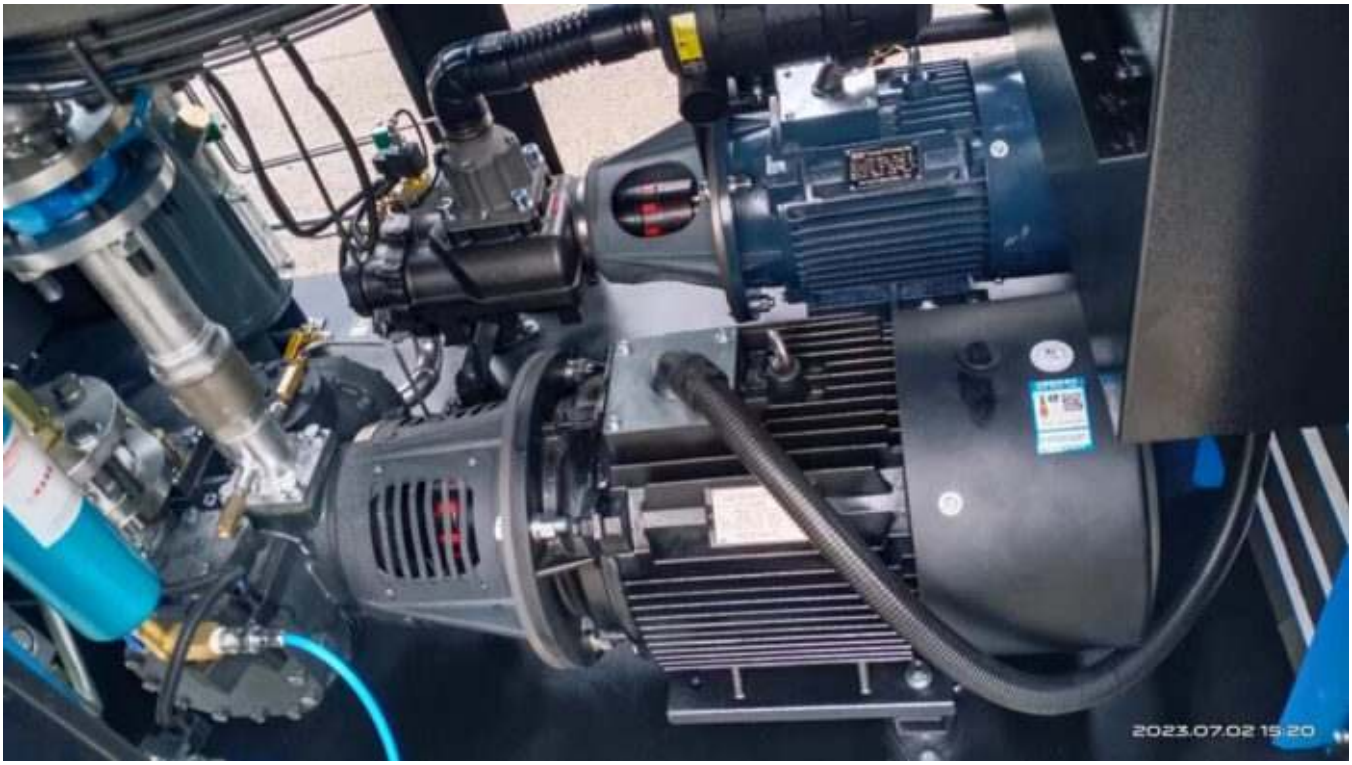

Separate motors and drives for the two compression stages.



Two motors on a common base frame in a Twin-series compressor.



Control cabinet with two VFDs; the compression-stage motors are below it.



Screw air-end and internal piping of a GMP Twin compressor.

3D models of the compressor and air-treatment assembly

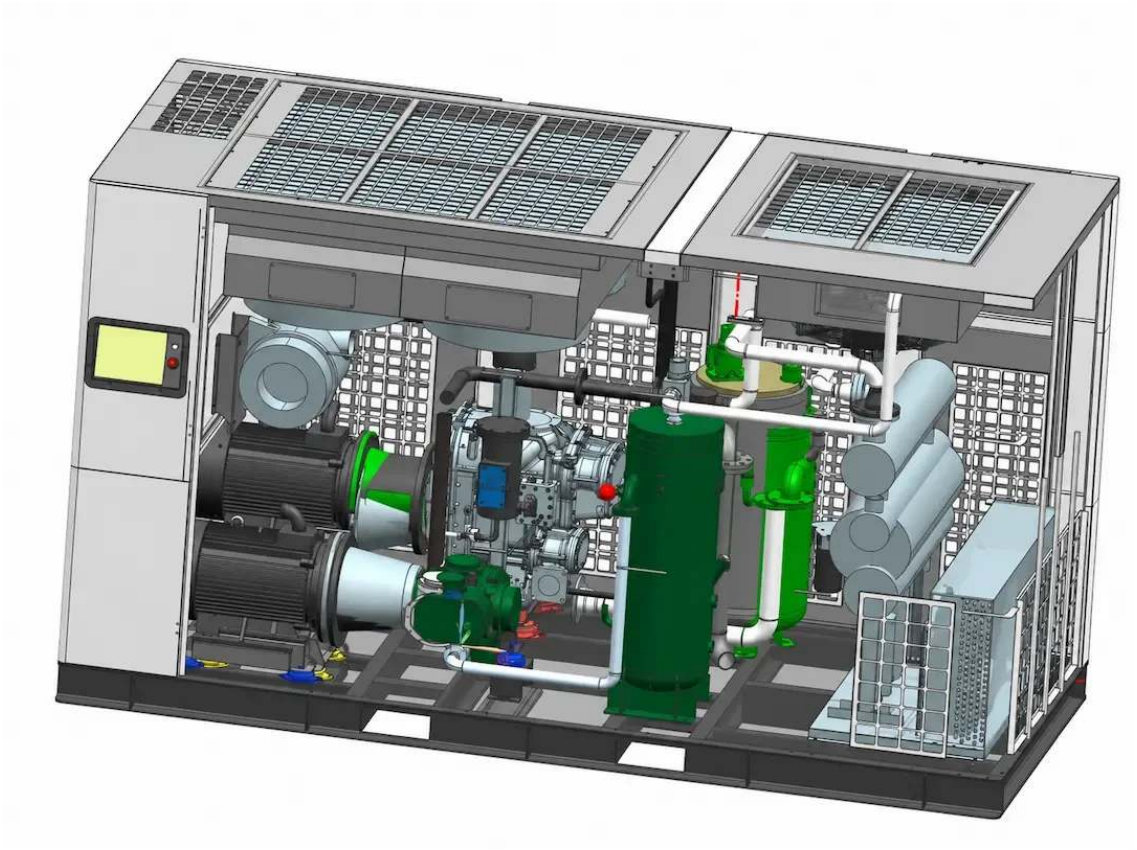

3D model of a GMP Twin (TW) high-pressure screw compressor: overall layout.

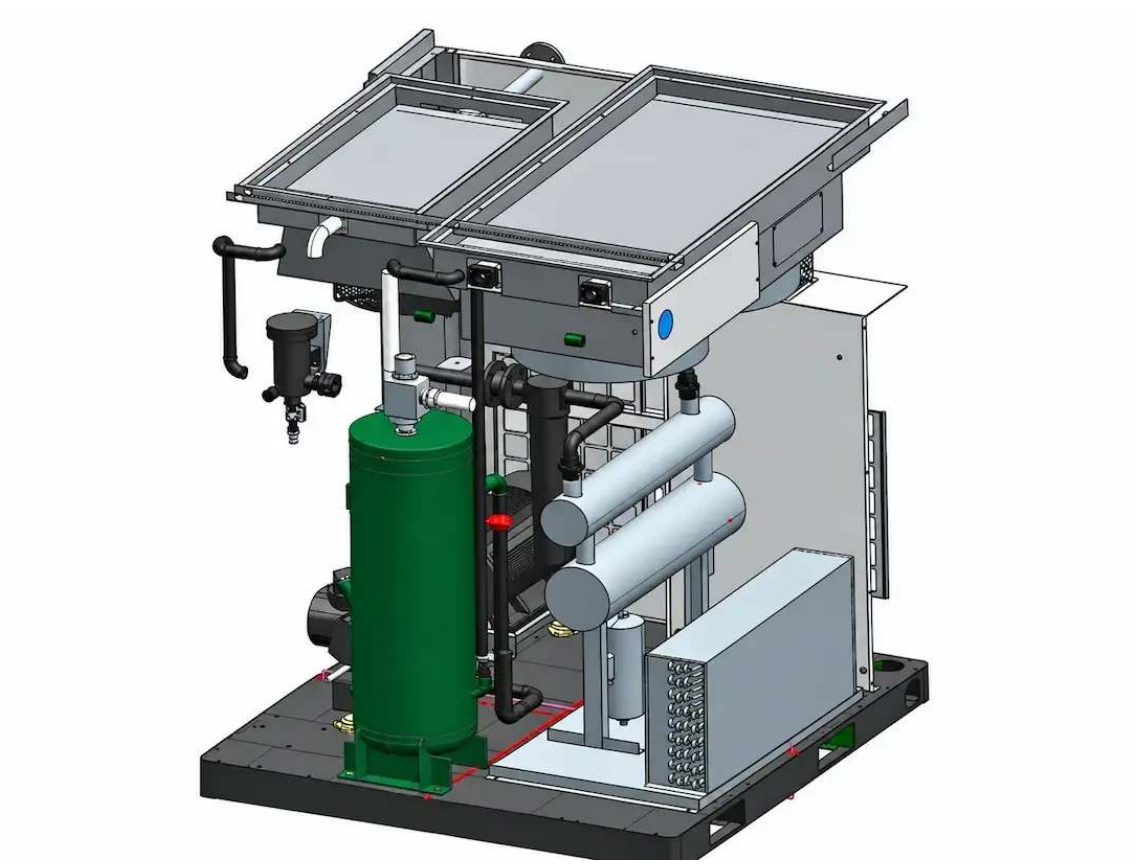

3D model of the dryer and interstage air-treatment area in GMP Twin.

Cool and dry the air before final compression

The process sequence is: first stage, cooling and liquid-water separation, refrigerated dryer, line filters, then second stage. The air entering the dryer must be within its permitted inlet-temperature range. Select the dryer for the actual flow and intermediate pressure, rather than compressor motor power alone.

Our technical description of GMP Twin specifies air entering the second stage at no more than 10 °C above ambient temperature. A full cooling and drying system between the stages provides these conditions. The second stage receives treated air rather than the hot stream directly discharged by the first stage.

Cooling causes water vapour to condense. Separate and drain this liquid before final compression: liquid water entering the second stage disrupts lubrication and can damage components.

The main benefit: reliability under sustained duty

Separate air-ends are easier to diagnose and service. Interstage treatment reduces thermal loading and removes water before final compression, bringing the air-ends' working conditions closer to those of familiar single-stage packages.

> For me, the value of this arrangement is its high reliability, separate compression stages, full interstage air treatment and coordinated protection of the complete package.

Verifiable manufacturer information

Screw-compressor service life: what Atlas Copco confirms

Expected service life, overhaul interval and actual running hours are different measures. Atlas Copco's published material provides three useful reference points:

- **60,000–80,000 hours.** Expected screw-compressor service life in Atlas Copco's general overview.
- **32,000 hours.** The recommended overhaul interval for a 45 kW oil-injected GA45 in a specific service case. The recommendation concerns a compressor of that type and size.
- **Almost 100,000 running hours per machine.** Three air-cooled, oil-free 250 kW ZT250 compressors at ORTA Textiles reached this figure without replacement air-ends. The technical manager also reports that the air-ends had not required an overhaul during that period.

In our experience, the service life and reliability of GE screw air-ends in this Twin arrangement are comparable to those of conventional single-stage screw compressors. We use Atlas Copco’s published range of 60,000–80,000 operating hours as a service-life reference.

Our experience · Cherkessk

Supplying a 132 kW, 40 bar compressor to a PET-container plant in Cherkessk



The PET-container manufacturer in Cherkessk previously used standard screw compressors with reciprocating pressure boosters.

The oil-lubricated boosters required frequent maintenance and large quantities of special oil. Service costs and production downtime led the customer to seek equipment for stable round-the-clock operation.

Our company supplied a GMP GM132-40GE VSD TW, rated at 132 kW and 40 bar. One enclosure contains two motors, two separate GE screw air-ends, VFDs and an integrated interstage dryer. This is the Twin series, identified by TW in the model name.

The customer selected the package for continuous operation. Routine maintenance follows familiar screw-compressor procedures: replacing synthetic compressor oil and filters according to the model's maintenance schedule. Standard servicing can be completed in a few hours, avoiding the constant special-oil handling and reciprocating-booster maintenance the customer experienced with the previous system.



Factory layout of the high-pressure package, with separate compression, cooling and control assemblies.

[Supply example on the manufacturer's website]

Receiver and dryer in one package

Compact high-pressure compressors



One of the main applications for compact high-pressure packages is supplying laser-cutting machines that use compressed air. High-output lasers particularly benefit from a stable flow of clean, dry air at the required pressure. Water, oil and particles contaminate the air circuit and

optics, affecting cut quality.

We cover equipment selection for this application in more detail in How to Select a Compressor for Laser Cutting.

What a 4-in-1 package includes

A 4-in-1 configuration generally combines the compressor, receiver, refrigerated dryer and filter system. For a laser, I select them as a complete package: pressure, flow, water removal and oil removal. With variable demand, a VSD helps match compressor capacity to the machine's operation.

Remove liquid water first

After the compressed air has been cooled, fit a liquid-water separator with condensate drainage between the compressor and dryer. This removes liquid water before the dryer. The refrigerated dryer then reduces the water-vapour content to its specified dew point.

At least three filtration stages, with activated carbon last

For the oil-injected laser package considered here, I recommend at least three filtration stages, ending with an activated-carbon cartridge. The selection includes preliminary particle and droplet removal, fine coalescing removal of oil aerosols and activated-carbon adsorption of oil vapour.

The activated-carbon cartridge adsorbs oil vapour and hydrocarbons; the dryer removes moisture. Arrange and maintain the filters to meet the laser's requirements. The entire package must be rated for the line's operating pressure.

When a 5-in-1 configuration is appropriate

Some manufacturers offer packages with an additional adsorption dryer, often described as 5-in-1. This is selected when the laser requires a lower dew point than a refrigerated dryer can provide. Allow for air consumed in desiccant regeneration, and take the required dew point from the specific laser machine's documentation.

The following are two examples of receiver-mounted packages with dryers. Check the filter arrangement and the inclusion of an activated-carbon stage for the model being ordered.



GMP GM22-20-600D VSD

22 kW · 20 bar · 2 m³/min
600-litre receiver · dryer · VSD · direct drive

View the GMP configuration



Remeza VK30T-20-470D2VS

22 kW · 20 bar · 1.7 m³/min
470-litre receiver · dryer · VSD · belt drive

View the Remeza configuration
The 30 in this Remeza model name does not mean 30 kW: its listed motor rating is 22 kW.

A receiver helps cover short demand peaks but cannot compensate for a sustained capacity shortfall. If the equipment continuously consumes more air than the compressor delivers, pressure will fall regardless of the size of a finite receiver.

From the compressor to the point of use

Air treatment at 20–40 bar

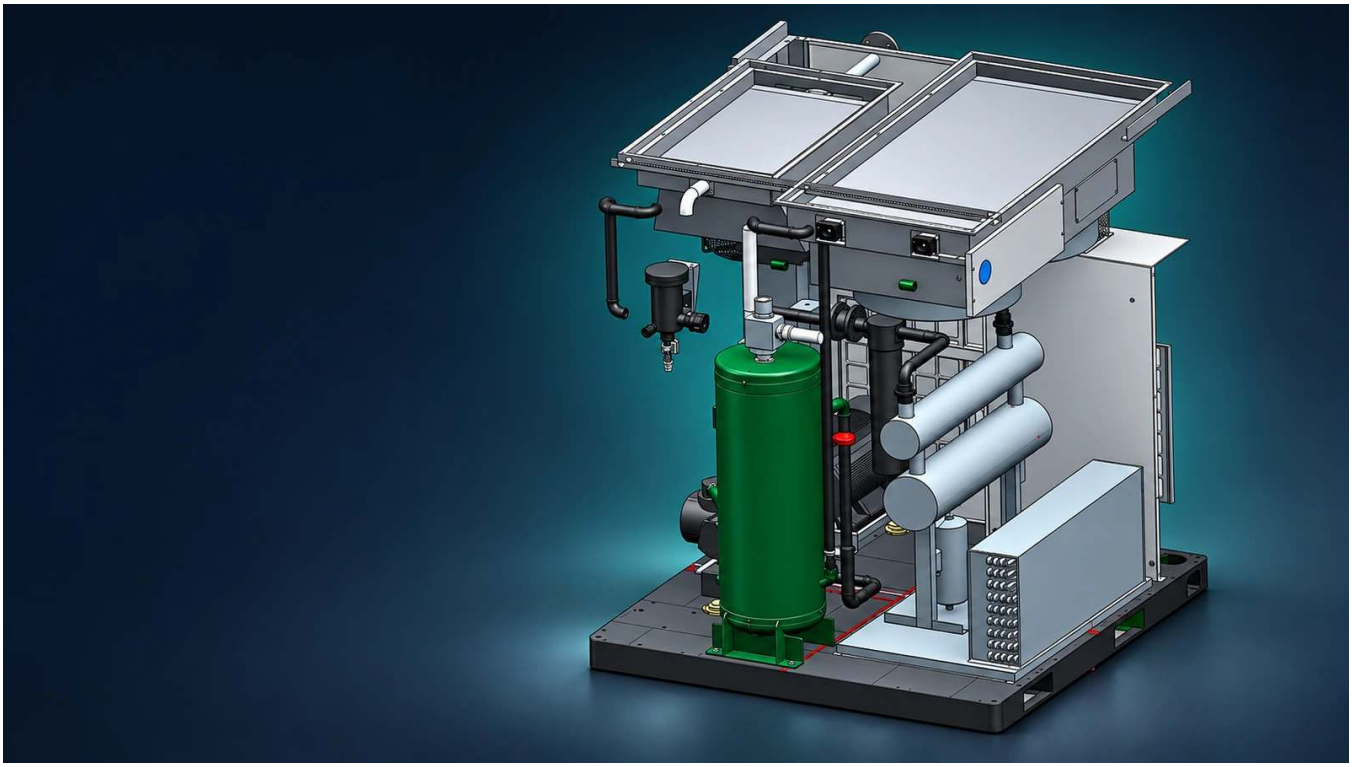

Check pressure ratings

The receiver, filters, dryer, condensate drains, valves and piping must be rated for the pressure in their section of the system.

Size the treatment equipment for the flow

Select dryers and filters for the flow, pressure, inlet air temperature and room conditions. Apply the manufacturer's correction factors and allowable pressure drop.

Specify air quality

Use the customer's and production-equipment manufacturer's requirements for particles, water and oil. ISO 8573-1 treats these as separate parameters. Some processes may require an oil-free compressor. For more information, see Oil-Injected or Oil-Free Compressor: How to Choose.

Check the air at the outlet

Drying before the second stage protects that stage, but does not automatically establish the pressure dew point at the final 40 bar. Confirm the required air quality at the equipment connection.

The compressor also needs sufficient cooling-air supply and heat removal from the room. A high compressor-room temperature reduces the cooling margin. Include installation conditions and the permitted room temperature in the selection from the outset.

For a high-pressure receiver installed in Russia, check its documentation, compliance with Technical Regulation TR CU 032/2013 and any registration requirements under the applicable Rostekhnadzor rules. Receiver volume alone is insufficient: pressure, fluid and equipment construction also matter. We explain selection in How to Select an Air Receiver.

Dryer selection is covered in more detail in our article on dryers and dew point.

KWT Market catalogue

Select pressure, flow and configuration



Specify the operating pressure, required air flow and station components: receiver, dryer and filters. The website selector links to the KWT Market catalogue. Check the permissible pressure and capacity of every component against its documentation.

For a supplier enquiry, state the operating pressure, minimum flow at that pressure, and whether a receiver and dryer are required. Agree the filters, air quality and installation conditions separately.

Before ordering and commissioning

What to include when preparing the best proposal for the customer

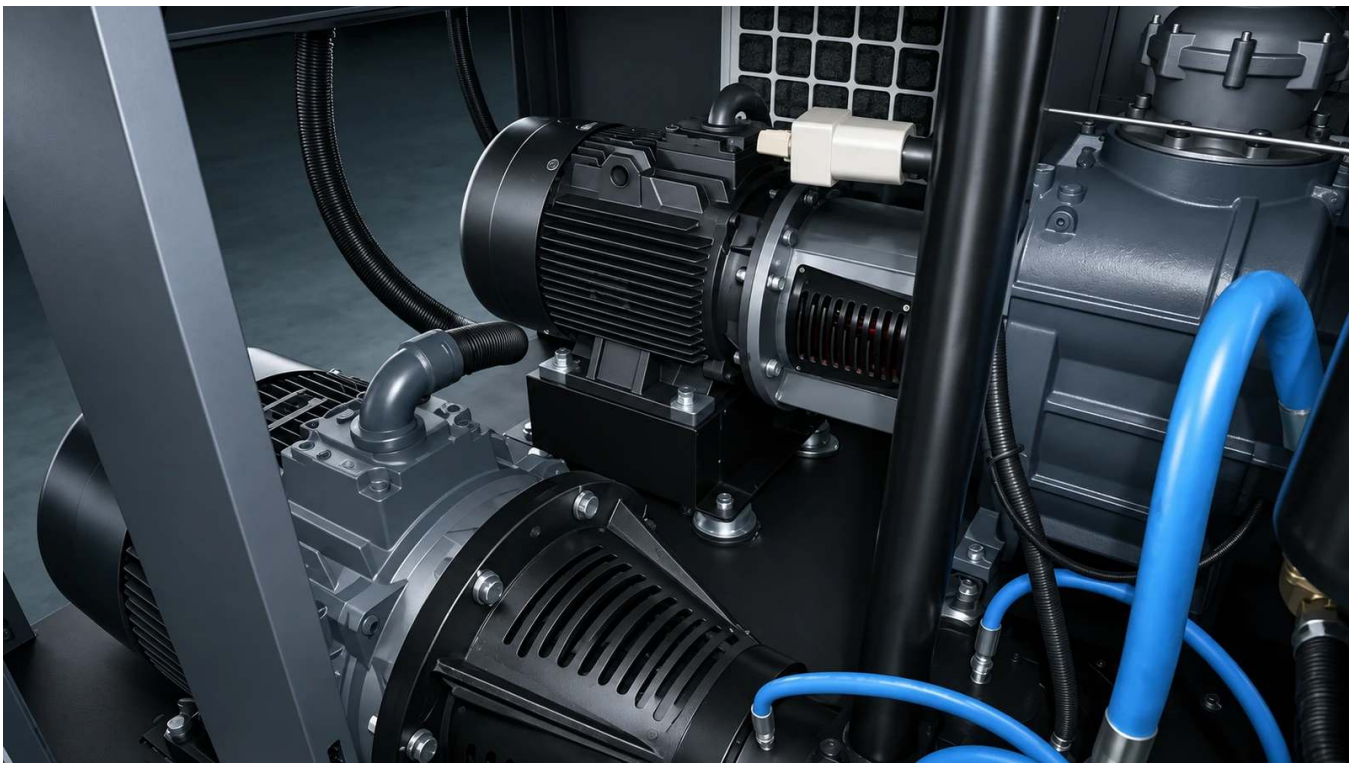

- **Flow and pressure at the point of use.** The FAD reference conditions and measurement method must allow proposals to be compared.
- **All electrical consumers.** State the compression-motor ratings separately from total package electrical input, including fans, dryer and pumps.
- **Design and duty.** Air-end models, stage types, drives, cooling, continuous-duty capability and compressor-room conditions.
- **Air treatment.** Component pressure ratings, dew point, filtration, condensate drainage and air quality at the production line.
- **Service and documentation.** Access to components, maintenance schedule, spare parts, equipment documentation, conformity documents and warranty conditions.

Download the technical specification template

A supplier-enquiry form covering pressure, FAD, load profile, air quality, electrical supply and cooling. It includes water parameters for water-cooled configurations.

Technical specification — editable DOCX

Technical specification — PDF

Download the acceptance protocol template

A form for recording configuration, operating conditions and measured pressure, flow, total power, temperatures and air quality. Enter the acceptance limits from the agreed specification and contract.

Acceptance protocol — editable DOCX

Acceptance protocol — PDF

During commissioning, record the pressure and temperature at each stage, and check the dryer, condensate drainage and manufacturer-specified protections. The required outcome is the specified pressure, flow and air quality at the point of use throughout the equipment's operating schedule.

Quick answers

Questions about 20–40 bar compressors

Which compressor arrangement should I choose for 20–40 bar?

For laser cutting at 20 bar with low air demand, we consider Hanbell AH210 and a 4-in-1 package. At 25–30 bar with a requirement of 2–4 m³/min, we select a BAOSI BLW configuration for the operating point. For critical 24/7 production, we recommend Twin with separate air-ends and motors, interstage treatment and water cooling in the selected configuration.

How can a 22 kW motor drive an air-end requiring approximately 26 kW at the shaft?

The configuration described here has a stated service factor of 1.3: 22 × 1.3 = 28.6 kW of permissible drive output. The AH210 operating point of 2 m³/min at 20 bar requires approximately 26 kW at the shaft and falls within this range. Total package electrical input is confirmed separately.

How do Hanbell AH210 and AH130 differ in 20 bar packages?

Hanbell's calculation at 20 bar gives AH130 a flow of 1.41 m³/min at 2,960 rpm and 22.1 kW shaft power. For AH210, 2 m³/min corresponds to approximately 2,180 rpm and 26 kW at the shaft. In the GMP configuration described here, the motor has a nominal rating of 22 kW and a service factor of 1.3. The author states that its permissible output range reaches 28.6 kW, making the AH210 operating point compatible with this drive. Total package electrical input is stated separately.

How do the stages in the GMP GM30-25VSD and GM30-30VSD configurations differ?

The 30 kW, 25 bar GMP GM30-25VSD described here uses a BAOSI BLW-70B with a screw first stage and a scroll second stage. According to the author's configuration details, the 30 kW, 30 bar GM30-30VSD uses a BAOSI BLW114-30 with two screw-compression stages.

Why does Twin have two motors and an interstage dryer?

Separate drives allow the operation of two screw air-ends to be coordinated. Interstage cooling, condensate removal, drying and filtration prepare the air before final compression. This reduces thermal loading and the risk of liquid water entering the second stage.

Why is cooling before the second stage so important?

If the air leaving the first stage is not cooled sufficiently, further compression increases thermal loading on the second stage, oil and bearings. In Twin, interstage cooling, drying and filtration prepare the air before it is compressed further.

Can a standard dryer be used on a 40 bar line?

Only if its permitted operating pressure and performance suit the line. The same applies to filters, receivers, condensate drains and valves. Also check inlet temperature, flow and the required dew point.

Does a high-pressure compressor need an air receiver?

A receiver can smooth short demand peaks and assist package control. Size it for the demand profile and the permitted pressure drop. A larger receiver cannot make up for a sustained shortage of compressor flow.

Are filters sufficient for air that contacts PET containers?

Select the equipment according to the customer's and production-equipment manufacturer's requirements for particles, water and oil. Some processes may require an oil-free compressor. Choose the air source and treatment system for these requirements, then verify air quality at the line connection.

When is a separate booster appropriate?

When an existing air source already provides the required inlet pressure and sufficient flow, and only one section needs high pressure. Compare the complete system's cost, energy use, maintenance, air treatment and booster duty.

What does a screw-compressor service life of 60,000–80,000 hours mean?

Atlas Copco gives 60,000–80,000 hours as a general reference for expected screw-compressor service life. This differs from an overhaul interval: a separate service article specifies 32,000 hours for an oil-injected GA45. The ORTA case describes ZT250 units with almost 100,000 running hours without replacement air-ends.

Where can I download the specification and acceptance templates?

The specification and acceptance section provides editable DOCX files and printable PDFs. The forms let you specify pressure, FAD, duty, air quality, electrical supply and cooling, then record the measurements. Enter acceptance limits from the agreed specification and contract.

Documents and specifications

Hanbell air-end catalogue · BAOSI BLW specifications · Patent for the integrated screw-scroll design. Links to the compressor packages and GMP supply projects are provided in their respective sections.